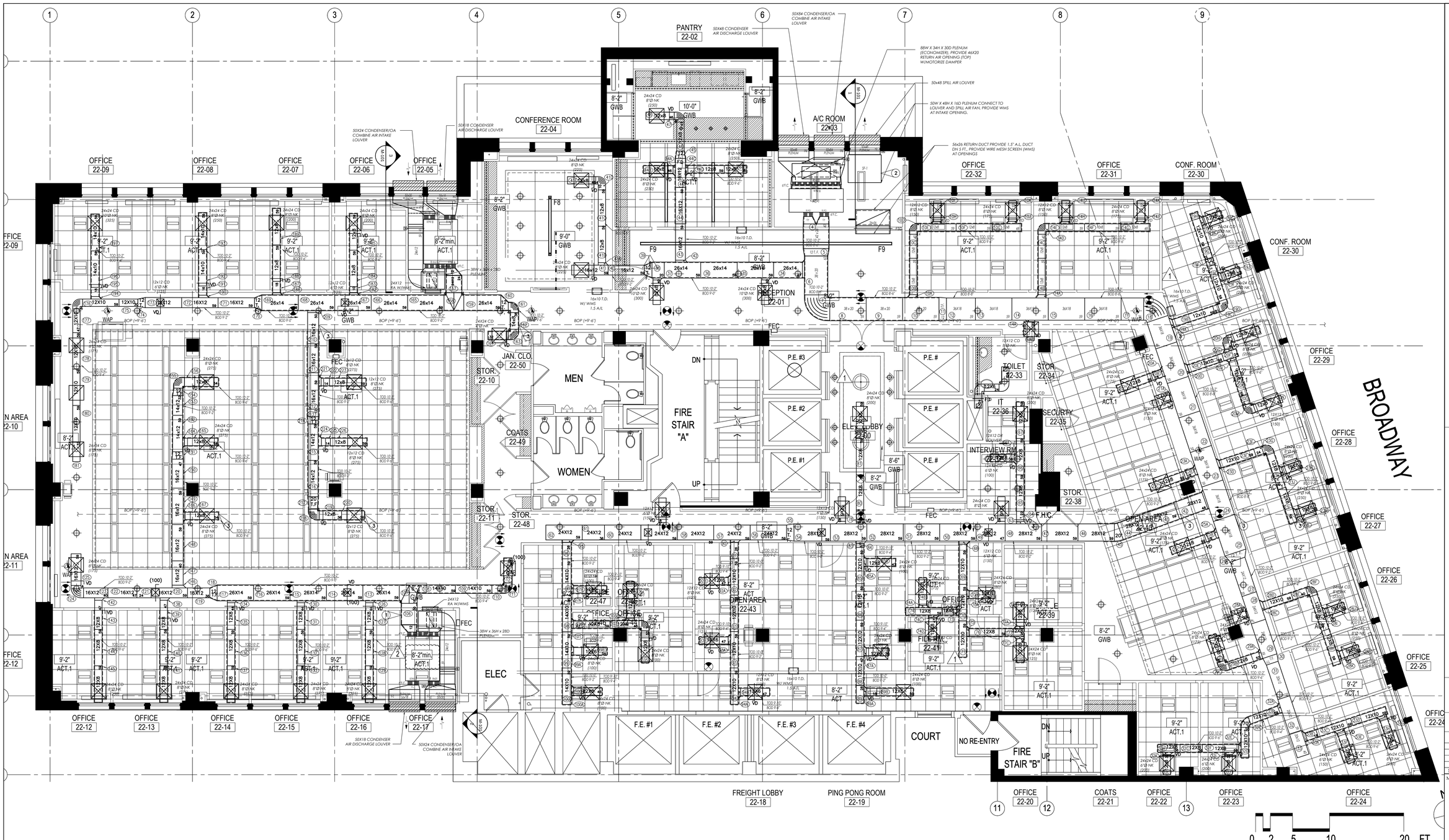


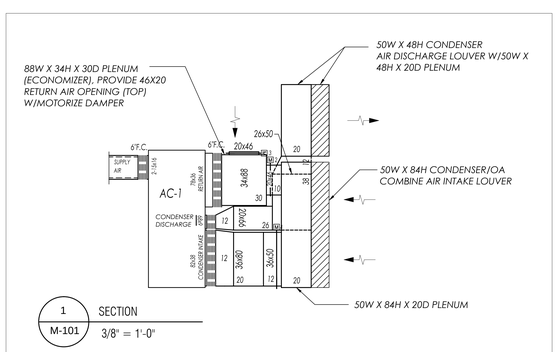


1 M-101 SECTION 3/8" = 1'-0"

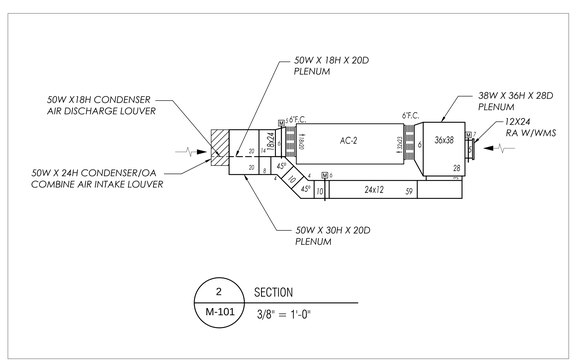


2 M-101 SECTION 3/8" = 1'-0"

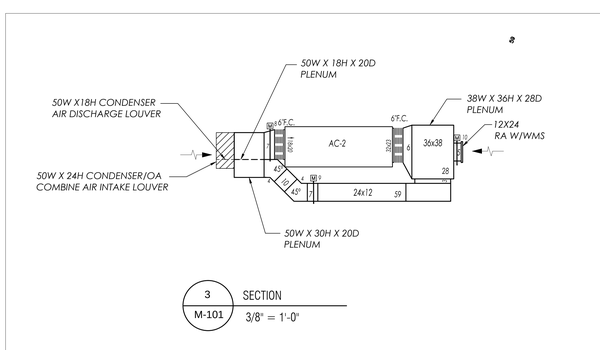


3 M-101 SECTION 3/8" = 1'-0"

*SEQUENCE OF OPERATION:*

*NORMAL OPERATION*

*SPILL AIR FAN SHALL BE OFF, M1 SHALL BE CLOSE*
*M4, M5, AND M8 SHALL BE OPEN (100%)*
*M2, M6, AND M9 SHALL BE OPEN AT (30%)*
*M3, M7, AND M10 SHALL BE OPEN AT (100%)*

*ECONOMIZER MODE*
*M1 SHALL BE OPEN (100%)*
*SF-1 SHALL TURN ON*
*CONDENSER FAN/MOTOR SHALL TURN OFF*
*M4, M5, AND M8 SHALL BE CLOSE*
*M2, M6, AND M9 SHALL BE OPEN AT (100%)*
*M3, M7, AND M10 SHALL BE CLOSE*
*OUTSIDE SET POINT TEMPERATURE 55° (ADJUSTABLE)*

THIS DRAWING IS A REPRESENTATION OF A PROPOSED LAYOUT. IT IS THE CONTRACTORS RESPONSIBILITY TO VERIFY AND REVIEW PRIOR TO FINAL SUBMISSION. CADSULTANTS IS NOT RESPONSIBLY FOR DISCREPANCYS IN THE FIELD. ANY CORRECTIONS TO THE DRAWING IS REQUIRED BY THE CONTRACTOR TO ADVISE CADSULTANTS BY A RED-LINED SKETCH OR VERBAL DESCRIPTION FOR FINAL SUBMISSION BEFORE PROCEEDING WITH WORK. FAILURE TO COMPLY WITH THE FOREGOING CONTRACT DRAWING MAY RESULT IN ADDITIONAL COSTS FOR DRAFTING RENDERED SUCH AS CHANGE ORDERS, DESIGN CHANGES, EQUIPMENT CHANGE OUT OR RELOCATION OF DUCT & FILED SURVEYS

**DRAWING NOTES:**

EXISTING SPRINKLER LINES BOP=9'-6"
POSSIBLE CONFLICTS THROUGHOUT.
SPRINKLER TO COORDINATE WITH
PROPOSED DUCTLAYOUT. G.C. TO ADVISE.

B.O.B (TYP. 10'-2")

AS-BUILT
05/30/14

SLAB TO DECK +----

| NO. | DATE | REVISION |
|---|---|---|
| 3 | 01/31/14 | REVISED-AS PER ENGINEERS COMMENTS |
| 2 | 01/17/14 | ADDED AC UNIT DUCTING |
| 1 | 01/07/14 | FOR APPROVAL |

MECHANICAL CONTRACTOR:

A1 EXPERTS
MECHANICAL CONTRACTOR
WEST INDUSTRY COURT
DEER PARK , NEW YORK
TEL: (631) 243-1122

DRAFTING COMPANY:

CADDSULTANTS
Certified CAD Specialist
All Types of Drafting
MARC HOFFMAN
167 Allen Road
Rockville Centre NY, 11570
Contact: 646:641:2512
Email: Caddsultant@yahoo.com

PROJECT INFORMATION:

1385 BROADWAY
NEW YORK, NY

DRAWING TITLE:

22TH FLOOR
SHEET-METAL PLAN

SCALE: 1/4"=1'-0"

DATE: 01/07/14

PAGE SIZE 36 x 52

DRAING NUMBER:

M-101